Card 9/10

AVAILABLE: Library of Congress

Card 10/10

JJP/ad
7-22-58

YEGOROV, K.P., redaktor; DOBRYNINA, A.Ya., redaktor; LEDNEVA, N.V., [illegible]nicheskiy redaktor

[Telecommunication system (L3); a collection of translated articles] Sistema dal'nei sviazi (L3); sbornik perevodnykh statei. Pod red. K.P.Yegorova. Moskva, Gos.izd-vo lit-ry po voprosam sviazi i radio, 1957. 116 p. (MLRA 10:9)

(Coaxial cables) (Amplifiers, Electron-tube)
(Television)

YEGOROV, K.P.

COMPONENTS

"High Sensitivity Vacuum Relay", By K.P. Yegorov, V.G. Krasin'lov and L.V. Reyman, Elektrosvyaz', No 9, September 1957, pp 58-64.

Description of a relay designed for operation at 0.01 -- 0.05 microamperes, with a winding resistance of 800 ± 100 ohms, a current-carrying ability 1 -- 2 ma, and an operating time of 0.5 seconds.

Card 1/1

AUTHORS: Yegorov, K. P. and Polyak, M.U. 270

TITLE: Design principles of simplified multichannel cable and radio-relay system equipment. (Printsipy postroyeniya apparatury uproshchennykh sistem mnogokanal'noy svyazi po kabel'nym i radioreleynym liniyam).

PERIODICAL: "Elektrosvyaz'" (Telecommunications), 1957, No.4, April, pp.48-54 (U.S.S.R.)

ABSTRACT: Work on economical multi-channel short-distance communication equipment began in U.S.S.R. in 1953. In the present articles, the authors present and discuss design principles of the existing prototype equipment. Standard high-frequency symmetrical cables are used, since for the same number of channels, the frequency-compression equipment can be dispensed with. Also, owing to the increase of bandwidth of a single channel from 4 to 6 to 8 kc/s, the terminal equipment becomes much simpler, which permits a considerable reduction in the quality and the number of side-band filters in the suppressed carrier SSB transmission. When double side-band transmission is used, the individual band filters become unnecessary because of the larger bandwidth and, if the number of channels does not exceed 12, common group amplifiers may be used. Both systems are adopted abroad, but the problem of an economical multichannel equipment serving a large local and long-distance

telephone network has not been solved. It can be solved by the use of a multi-channel system with a simple phase-shifting network in every channel and of simple band-pass filters in detection, the principle of phase-shifting equipment is as follows: two voice channels at the input (300 to 3400 c/s) are shifted in phase by simple phase-shifting networks and are then applied to the inputs of two modulators. The phase-shifting quadripoles are chosen so as to produce approximately a 90° - phase shift between signals applied to the two modulators. The carrier currents are also shifted by 90° out of phase. As shown in the block diagram of the circuit, currents of one of the side-bands are combined in a common load, the other side-band is suppressed. Small attenuation of the unwanted side-band is needed (3.0 to 2.7 Nepers), components are cheap (coils with Q of 40 to 50, condensers within $\pm$ 5%). The basic filtering is made at voice frequencies, it is the same both at the receiving and sending ends, so that duplicating is possible. The possibility of use of semi-conductor devices and of advanced wiring and packaging techniques could make the installation smaller, consuming less power and having better reproducibility characteristics.

Design principles of simplified multichannel cable and radio-relay system equipment. (Cont.)

The phase-shifting networks are able to attenuate sidebands in a rather wide range of carrier frequencies, the channel separation at the receiving end is also easy. The basic 30 channel group in the 312 to 552 kc/s frequency range has been adopted, as this range is most suitable for Styroflex symmetrical cables of Russian manufacture; it is used for uni-directional transmission, in the opposite direction and can employ a bandwidth of 12 to 252 kc/s, which coincides with the K-60 standard system. It is thought that it would be possible to use this type of equipment in the existing local cable systems and also, after modifications, in radio relay lines for distances of only 10 to 15 km. 4 diagrams of various types of installations and 1 graph relating the attenuation, as a function of phase-shift, to the voltage ratios of signals at the output of modulators are given.

PART I BOOK EXPLOITATION SOV/4207

Leningradskiy elektrotekhnicheskiy institut svyazi imeni prof. M. A. Bonch-Bruyevicha.

Trudy LEIS, vyp. 3(36) (Transactions of the [illegible] Institute im. M. A. Bonch-Bruyevich, Nr 3(36) [illegible]) [illegible] 400 copies printed.

Editorial Board: A. F. Cavrilov, Professor, [illegible] K. P. Yegorov, Docent, L. M. [illegible], [illegible] K. V. Zolotih, Professor, I. G. [illegible], [illegible] Docent (Resp. Ed.), [illegible] V. B. Ilinskiy, Professor, [illegible] Docent, and F. V. Shishov, Professor; [illegible]

PURPOSE: This collection of articles is for [illegible] specialists in various fields of electrical engineering.

COVERAGE: The articles cover the following [illegible] optical scanning arrays, [illegible] time-pulse method of electrical connection [illegible] Larionov circuits, $\sum_{n=1}^{\infty} e^{-\pi n^2} \begin{matrix}\cos \\ \sin\end{matrix} \pi x$ series, and conical spiral beam antennas. No personalities are mentioned. [illegible] of the articles are accompanied by references.

TABLE OF CONTENTS:

AVAILABLE: Library of Congress (TK5101.A1A2)

JP/rhs/oc
8-5-60

Card 1/1

Sov/106-58-2-7/16

AUTHORS: Yegorov, K.P. and Paramonkova, L.D.

TITLE: Miniature Transformers for Multi-channel Communication Apparatus (Malogabaritnyye transformatory dlya apparatury mnogokanal'noy svyazi)

PERIODICAL: Elektrosvyaz', 1958, Nr 2, pp 51 - 58 (USSR).

ABSTRACT: This work is the result of meeting transistor circuit requirements using new magnetic materials and was carried out at one of the NII MRTP. The fundamental formula on which the reduction in dimensions is based is $V^{2/3} = \tau/c\mu$, where V is the core volume, μ is the permeability of the materials and c is a constant. The core materials considered are the high-nickel permalloys 79NM, 80NKhS and 79NM"A" having initial permeabilities between 15 000 and 30 000 gauss/Oe and ferrites with figures of 1 000 to 2 000. The winding wires used have been types PEL and PEV with a diameter over the copper of 50 μ and more. The theoretical basis for the optimum choice of core dimensions has been provided by Prof.G.S.Tsykin. Table 1 shows the dimensions of the laminations (unequal E's) and ferrite cores (equal E's) which have been used. The side dimension varies from 8 to 20 mm. Table 2 shows dimensions of most commonly used core assemblies. Figures 1 and 2 show the component parts and assemblies potted in epoxy-resin. Figure 3

Card1/2

Sov/106-58-2-7/16

Miniature Transformers for Multi-channel Communication Apparatus

shows the startling reduction in size possible when replacing a transformer of the SMT-35 system (1935-1939) with a modern unit. Figures 4, 5, 6 and 7 shows the responses of several transformers over the range 0.2 to 6 kc/s and 10 to 100 kc/s for various values of direct current. The high-frequency response of these units is in general very good because the stray capacitance is small and the leakage coefficient is typically about 0.001. A comparison is made between various core materials as far as third harmonic distortion is concerned. There are 7 figures, and 2 tables.

SUBMITTED: 1. Communications systems--USSR 2. Transformers--Applications
Card 2/2 3. Magnetic materials--Applications 4. Transistors--Circuits

22210

S/106/61/000/001/006/008
A055/A033

6.7310

AUTHORS: Yegorov, K. P. and Sukhodoyev. I. V.

TITLE: High-frequency telephony system using semiconductor triodes.

PERIODICAL: Elektrosvyaz', No. 1, 1961, 50 - 57

TEXT: To improve telephone communications in rural districts, where primitive cables are often used, a three-channel system, specially intended for low--echelon service has been recently developed in the USSR. This system consists practically of two independent systems: a one-channel system (channel 1/3) and a two-channel group system (channels 2/3 and 3/3). Both systems can work simultaneously on one cable, their intermediate repeaters being set up in the same points. The channels 2/3 and 3/3, forming the main two-channel system, are calculated for the 300 - 3,400 cycle band, whereas channel 1/3 allows the transmission of a 300 - 2,700 cycle frequency spectrum. The system is essentially based upon the utilization of transmit-receive device. Phase modulation is used in the transmit--receive devices. The optimum conditions set upon the system being rather contradictory, a compromise solution was chosen after a thorough examination of the problem. For each of the transmission routes a separate group of two channels is

Card 1/4

22210

S/106/61/000/001/006/008
A055/A033

High-frequency telephony system ....

used, formed by frequency conversion of the high frequency group (328.3 - 335.7 kc) into the line transmission range. As for the one-channel system, it is practically an improved audio-frequency telephone channel. For one of the routes, transmission is effected on audio frequencies (0.3 - 2.7 kc), and for the other route on the band 3.7 - 6 kc. To transmit call and dialling currents, a narrow-band signal channel is provided for. The transmission of signals with -0.4 nep output level ensures a sufficient noiseproofness of the channels. Amplitude-frequency distortions are corrected by line equalizers connected at the input-side of repeaters in intermediate and terminal rural stations. The most complex and important junction points of the system are the generating and amplifying devices. In the channels 2/3 and 3/3, generators of individual carriers (328 and 336 kc) are used for forming the two-channel group in the 328.3 - 335.7 kc range. These are two-stage transistorized generators. Their connecting diagram isshown in figure 2. The transistors are connected in a common-emitter arrangement. The bases are biased by means of voltage dividers. With a vierw to ensuring the temperature stabilization of the generator parameters, the operating points of the transistor triodes are stabilized by the circuits R_1, R_2, R_4 and R_7, R_8, R_{10}. Negative feedback through R_4 and R_{10} is used as additional stabilization. The temperature

Card 2/4

22210
S/106/61/000/001/006/008
A055/A033

High-frequency telephony system ...

stability coefficient was chosen equal to 2.8. The collector loads are formed by tuned IC-circuits. A crystal resonator is connected in series with the positive feedback circuit. The auxiliary generators differ from the main one inasmuch as they contain no crystal generator in the positive feedback circuit, and the parameters of their IC-circuits are not the same. The generator for channel 1/3 is a 6.4 kc carrier generator. Another particularly important junction point of the system is the group repeater used in unattended stations. The principal features of this transistorized four-stage amplifier (also connected in a common--emitter arrangement) are the linearity of the response and the low level of noises. The thorough design of the whole system made it possible to reduce the noise in the repeaters to a sufficiently low level (not exceeding - 14.5 neper in the band of one channel). The frequency and amplitude characteristics of the repeater are reproduced in the article, as well as its connecting diagram. Thanks to the use of transistors, the whole set for the three-channel system is highly economical, the total average current drain being only 45 ma in the intermediate stations, and 120 ma in the terminal ones, which corresponds, at 24 volts, to less than 1 watt per channel. There are 6 figures, 1 table and 2 Soviet-bloc references.

SUBMITTED: June 22, 1960

Card 3/4

22210
S/106/61/000/001/006/008
A055/A033

High-frequency telephony system

Figure 2:

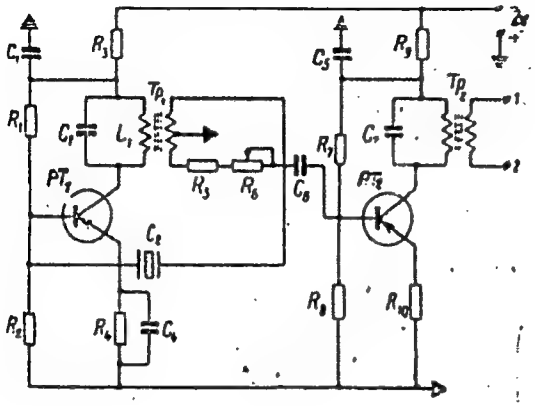

Card 4/4

YEGOROV, Konstantin Petrovich; CHESNOKOVA, T.V., red.; SLUTSKIN, A.A., tekhn. red.

[Principles of multichannel communications]Osnovy mnogokanal'-noi sviazi. Moskva, Sviaz'izdat, 1962. 415 p. (MIRA 15:11)

(Telecommunication) (Telephone lines)

YEGOROV, K.P.; BOBROVSKAYA, I.K., otv. red.; GAL'CHINSKAYA, V.V., [redacted]khn. red.

[Long-distance multichannel telecommunication; dynamics of automatic level control] Dal'niaia mnogokanal'naia sviaz'; dinamika avtomaticheskoi regulirovki urovnei (ARU) . Uchebnoe posobie dlia studentov-zaochnikov. Leningrad, Leningr. elektrotekhn. in-t sviazi im. prof. M.A.Bonch-Bruevicha. No.10. 1962. 22 p. (MIRA 16:8)
(Telecommunication)

YEGOROV, K.V.

YEGOROV, K.V.

On some Russian works in the field of automatic control. Sbor.nauch. rab.Mekh.inst. no.3:5-14 '52. (MLRA 8:3)
(Automatic control--History)

YEGOROV, K.V.

On integral and differential analyzers. Sbor.nauch.rab. Mekh.inst. no.3:101-114 '52. (MLRA 8:3)

(Calculating machines) (Calculus, Operational)

GIVARTOVSKAYA, N. A., AND YEGOROV, K. V.

Testing of Apparatus for Measuring Short Time Intervals

The basic design for a transducer of short time intervals is discussed. The intervals are from one millisecond to one sec.; the errors from 0.05 millisecond to 0.5 millisecond. (RZhFiz, No. 8, 1955) Sb. Statey Zaoch. Politekhn. in-ta, No. 6, 1954, 19-25.

SO: Sum. No. 744, 8 Dec 55 - Supplementary Survey of Soviet Scientific Abstracts (17)

YEGOROV, Konstantin Vasil'yevich; MAR'YANOVSKIY, D.I., redaktor; VORONIN, K.P., tekhnicheskiy redaktor.

[Fundamentals of automatic control] Osnovy avtomaticheskogo regulirovaniia Moskva, Gos.energ.izd-vo 1955. 455 p.
(AUTOMATIC CONTROL) (MLRA 9:1)

~~YEGOREV, K. V.~~
YEGIOROV, K. V.

1333. Egorov, K. V., Stability of automatic regulation systems (in Russian), Ucheb. Posobie Dlya Studentov Spetsialnosti Automat. Telemekhanika 79 pp., 1954; Rev. no 12, Ref. Zh. Mekh. 1956.
Courtesy of Referativnyi Zhurnal

TEXTBOOK

VERSHININ, Nikolay Ivanovich; VERTSAYZER, Anatoliy L'vovich;
YAKOVLEV, Vladimir Mikhaylovich; YEGOROV, K.V., red.

[Automatic control] Avtomaticheskoe regulirovanie.
Izd.2., perer. i dop. Moskva, Energiia, 1965. 135 p.
(MIRA 18:4)

MALOV, Vladimir Sergeyevich; YEGOROV, K.V., otvetstvennyy red.; GONCHAROVA, I.V., red. izd-va; BOBROV, P.G., tekhn. red.

[Telemetering; lectures] Teleizmerenie; lektsii. No.3. [Impulse and frequency systems of telemetering] Impul'snye i chastotnye sistemy teleizmereniia. 1957. 64 p. Moskva, Vses. zaochnyi politekhn. in-t. (MIRA 11:8)

(Telemetering)

VERSHININ, Nikolay Ivanovich; VERTSAYZER, Anatoliy L'vovich; YAKOVLEV, Vladimir Mikhaylovich; YEGOROV, K.V., red.; BORUNOV, N.I., tekhn.red.

[Automatic control] Avtomaticheskoe regulirovanie. Moskva, Gos. energ.izd-vo, 1959. 127 p. (Biblioteka po avtomatike, no.3) (Automatic control) (MIRA 12:5)

YEGOROV, Konstantin Vasil'yevich, prof.; GORDEYEV, D.G., red.

[Elements of the dynamics of automatic control systems with random perturbations] Elementy dinamiki sistem avtomaticheskogo regulirovaniia pri sluchainykh vozdeistviiakh. Cheboksary, Chuvashskoe knizhnoe izd-vo, 1965. 30 p. (MIRA 18:12)

USSR/Human and Animal Morphology - Pathological Anatomy. S

Abs Jour : Ref Zhur Biol., No 5, 1959, 21635

Author : Yegorov, K.V., Savinich, B.V.

Inst : Astrakhan Medical Institute

Title : Pathological-Anatomical Changes in Ammonia Intoxication

Orig Pub : Tr. Astrakhansk. med. in-ta, 1958, 205-213

Abstract : No abstract.

Card 1/1

YEGOROV, K.Ye. (Moskva)

Pressing a punch with a flat annular bottom into a semispace.
Izv.AN SSSR.Mekh. i mashinostr. no.5:187-190 S-O '63. (MIRA 16:12)

YEGOROV, K.Ye.

Bedding deformation under a rigid cylindrical foundation having an excentric load. Trudy NII osn. i fund. no.11:119-138 '48.
(Foundations) (Soil mechanics) (MLRA 7:11)

YEGOROV, K.Ye.

YEGOROV, K.Ye.

Settlement of the foundations of high buildings. Trudy NII osn. i fund. no.24:4-22 '55. (MLRA 8:3)
(Subsidences (Earth movements)) (Foundations)

BARKAN, D.D.; YEGOROV, K.Ye.; POPOV, B.P.; SVETINSKIY, Ye.V.; PEVZNER, A.S., redaktor; MEL'NICHENKO, F.P., tekhnicheskiy redaktor

[Instructions for deep solidification of weak saturable soil by means of sand piles in laying foundations of buildings and structures] Instruktsiia po glubinnomu uplotneniiu slabykh vodonasyshchennykh gruntov peschanymi svaiami pri ustroistve osnovanii zdanii i s ooruzhenii (I 198-55/Minstroi). Moskva, Gos. izd-vo lit-ry po stroit. i arkhitekture, 1956. 44 p. (MIRA 9:12)

1. Russia (1923- U.S.S.R.) Ministerstvo stroitel'stva. Tekhnicheskoye upravleniye.
(Foundations)

MUSHKAT, M. A., Cand. Techn., Scientific Research Institute of Soil Mechanics and Foundations, MUZHIN, P. G., Cand. Tech., Novaya Pasalanaya, K26 loc 52, and POPOV, B. P., Cand. Techn., Scientific Research Institute of Soil Mechanics and Foundations, Moscow

"The Observed Settlements of Buildings as Compared with Preliminary Calculation," a paper submitted at the 4th International Conference of the International Society of Soil Mechanics and Foundation Engineering, London, 12-24 Aug 57.

124-58-9-10407

Translation from: Referativnyy zhurnal, Mekhanika, 1958, Nr 9, p 143 (USSR)

AUTHORS: Yegorov, K. Ye., Popov, B. P., Kuz'min, P. G.

TITLE: Actual Settling of Tall Buildings and Its Comparison With Calculated Values (Fakticheskiye osadki vysotnykh zdaniy i sravneniye ikh s raschetnymi)

PERIODICAL: V sb.: Materialy k 4-mu Mezhdunar. kongressu po mekhan. gruntov i fundamentostr.; Moscow, AN SSSR, 1957, pp 88-99

ABSTRACT: Bibliographic entry

1. Structures--Stability 2. Mathematics--Applications

Card 1/1

YEGOROV, K.Ye.

Deformation of a base of final thickness. Sbor.trud.NIIOSP no.34:5-33 '58. (MIRA 12:1)
(Soil mechanics) (Foundations)

YEGOROV, K.Ye.

Calculating the base of a foundation with circular footing.
Sbor.trud.NIIOSP no.34:34-57 '58. (MIRA 12:1)
(Soil mechanics) (Foundations)

YEGOROV, K. YE.

18(10); 3(5) PHASE I BOOK EXPLOITATION SOV/2843

Soveshchaniye po ratsional'nym sposobam fundamentostroyeniya na vechnomerzlykh gruntakh

Trudy... (Transactions of the Conference on Efficient Methods of Building Foundations on Permafrost Soils) Moscow, Gosstroyizdat, 1959. 131 p. Errata slip inserted. 1,200 copies printed.

Ed. of Publishing House: N. M. Borshchevskaya; Tech. Ed.: Ye. L. Temkina.

PURPOSE: This book is intended for construction engineers, industrial planners and builders.

COVERAGE: This book contains reports originally read in Vorkuta in 1958 on experience gained in planning and building foundations in permafrost regions of the USSR. The reports were prepared for publication in the NIIOSP (Scientific Research Institute for the Study of Foundations and Underground Structures). The introduction was written by Professor V. G. Bulychev. No references are given.

AVAILABLE: Library of Congress

MK/mmh
1-18-60

Card 4/4

YEGOROV, K.Ye.

Studying deformations in foundation layers of flues. Osn., fund. i mekh. grun. no.4:4-7 '59. (MIRA 12:10)
(Flues) (Foundations)

SECHI, Karoy [SZECHY, Karoly], prof., doktor; TIPOL'T, S.A., inzh. [translator]; YEGOROV, K.Ye., kand.tekhn.nauk, nauchnyy red.; BEGAK, B.A., red.izd-va; OSENKO, L.M., tekhn.red.

[Errors occurring in foundation engineering] Oshibki v sooruzhenii fundamentov. Predisl. M.I.Gorbunova-Posadova. Moskva, Gos.izd-vo lit-ry po stroit., arkhit. i stroit.materialam, 1960. 142 p. (MIRA 14:1)

(Foundations) (Soil mechanics)

report presented at the 1st All-Union Congress of Theoretical and Applied Mechanics, Moscow, 27 Jan - 3 Feb '60.

102. J. Dvorak (Prague): The state of stress and deformation of the turbine blades.

103. V. M. Dubr (Kharkov): On some new forms of the general solution of the three-dimensional problem of the theory of elasticity expressed in harmonic functions.

104. A. A. Derkachev (Sverdlovsk): Generalization of the method of steepest descent in structural mechanics.

105. B. V. Deriagin (Moscow), N. V. Churaev (Leningrad): Surface phenomena in the mechanics of clays.

106. A. N. Dmoov (Moscow): Experimental data concerning the propagation of vibrations of different frequencies in concrete mixtures.

107. G. Ia. Dzhanelidze (Leningrad): Almansi's problem.

108. M. I. Dlugach (Kiev): A finite difference analysis of cylindrical shells with rectangular holes.

109. M. I. Dlugach (Kiev): Generalization of Mohr's method of determining the displacements in problems of the theory of elasticity.

110. M. E. Dolberg (Kharkov): The construction of solutions of the equations of structural mechanics by means of special uniformly convergent series.

111. L. G. Drapkin (Leningrad): A method of investigating the states of stress and strain and the slip lines in anisotropic multilayer metals.

112. A. V. Dietlev (Dnepropetrovsk): The stability of an obliquely bent beam.

113. L. I. Dzitlovitskii, L. B. Rabinovich (Kiev): A problem concerning elastic bodies whose configuration changes in the course of loading, with application to the erection of structures.

114. F. D. Evdokimov (Leningrad): On the shear strength of structural rock foundations.

115. F. D. Evdokimov (Leningrad): On friction in sandy soils and their shear strength.

116. E. N. Egorov (Moscow): The deformation of the ground under an earthen foundation.

117. S. S. Elmanovich (Moscow): On stresses and strains of thin-walled rods of variable cross section at normal and elevated temperatures.

118. Zh. S. Ershanov (Dnepropetrovsk): Determination of the pressure on a tunnel facing taking account of the hereditary creep of soils.

119. Zh. S. Ershanov (Dnepropetrovsk): The integral operator method of determining the creep characteristics of soils from observations in situ.

120. E. P. Ershov (Kerch): The elastic-plastic bending of a bar.

121. A. M. Zhukov (Moscow): Elastic properties of a plastically deformed metals under combined loading.

122. F. A. Zhuravlev, A. F. Zakharevich, N. P. Kornev (Leningrad): Application of the method of characteristics to the determination of the tension in the cable of a mine elevator.

123. M. A. Zaidelin (Irkutsk): On the propagation of plastic zones in a beam under impulsive loading.

124. L. I. Zaitsev (Moscow): On the surface-head-curve.

125. B. V. Ivanov, Sh. N. Kats (Leningrad): An experimental study of creep-rupture characteristics of tubes under combined stresses.

126. N. V. Ivanovskii (Moscow): The propagation of an elastic wave due to an underground explosion.

127. A. N. Kolesnik (Moscow): On the state of stress in compression and its effect on the construction of Mohr's circles.

128. V. K. Illiev, Ia. B. Friedman (Moscow): The laws of deformation and rupture kinetics.

129. F. L. Imanov (Leningrad): Flow of water-saturated soils under dynamic loading

130. V. S. Ivanova (Moscow): The hypothesis of energetic similarity in fatigue fracture and the melting of metals.

131. D. D. Ivlev (Voronezh): On the anisotropy of elastic and plastic bodies.

132. I. N. Ingtov, Ia. I Lagi (Leningrad): Plastic tension and torsion of thin-walled nickel tubes that have become anisotropic through prior plastic deformation.

133. Iu. R. Klocke, B. N. Sokolov (Moscow): Investigation of elastic strains and vibrations in aircraft structures by means of electronic computers.

S/020/60/133/04/08/031
B019/B060

AUTHOR: Yegorov, K. Ye.

TITLE: The Contact Problem for an Elastic Layer Under the Action of an Eccentric Vertical Force Upon a Circular Rigid Punch

PERIODICAL: Doklady Akademii nauk SSSR, 1960, Vol. 133, No. 4, pp. 781-784

TEXT: In the case of an eccentric force acting upon a punch, the problem is divided into the determination of the central force P and the determination of the couple with the moment Pe, where e is the eccentricity. The components of displacement are given in the form of three differential equations for u, v, and w. For u the following holds: $u = \varphi_1 + z \frac{\partial \psi_4}{\partial x}$; the expressions for the other two components are analogous. The functions ψ_i (i = 1, 2, 3, 4) are harmonic functions; these are transformed to (3) for the solution of the contact problem for an elastic half-space. Bessel functions of the first kind occur in these

Card 1/3

The Contact Problem for an Elastic Layer Under the Action of an Eccentric Vertical Force Upon a Circular Rigid Punch

S/020/60/133/04/08/031
B019/B060

harmonic functions. Next, the unknown coefficients A, B, C, D are determined from the given boundary conditions. For simplifying the solution both the friction between the punch and the elastic layer with the thickness H, and the friction between elastic layer and immobile base, are assumed to be absent. Integral (4) for the stress component normal to the upper boundary of the elastic layer and the vertical shift are given. The integration of these quantities is dealt with in detail, and reference is made to a work by N. N. Lebedev and Ya. S. Uflyand (Ref. 4). Formulas (8) and (11) are obtained for these quantities. Finally, the passage is made to dimensionless quantities for the purpose of a numerical calculation. The author derives formulas for the calculation of the moment M of the couple, for the inclination angle of the punch under the action of this moment and for the normal stress component. There are 1 figure and 7 Soviet references.

Card 2/3

The Contact Problem for an Elastic Layer Under the Action of an Eccentric Vertical Force Upon a Circular Rigid Punch

S/020/60/133/04/05/031
B019/B060

ASSOCIATION: Nauchno-issledovatel'skiy institut osnovaniy i podzemnykh sooruzheniy Akademii stroitel'stva i arkhitektury SSSR (Scientific Research Institute for Foundations and Subterranean Installations of the Academy of Construction and Architecture of the USSR)

PRESENTED: February 20, 1960, by Yu. N. Rabotnov, Academician

SUBMITTED: February 16, 1960

Card 3/3

YEGOROV, K. YE.

PHASE I BOOK EXPLOITATION SOV/5854

Akademiya nauk SSSR. Institut merzlotovedeniya

Issledovaniya po fizike i mekhanike merzlykh gruntov (Investigations in Frozen-Ground Physics and Mechanics) no. 4, Moscow, 1961. 251 p. Errata slip inserted. 1500 copies printed.

Sponsoring Agency: Akademiya nauk SSSR. Institut merzlotovedeniya im. V. A. Obruchevа.

Resp. Eds.: Z. A. Nemchenova and N. A. Tsytovich; Ed. of Publishing House: I. N. Mikhaylova; Tech. Ed.: V. V. Volkova.

PURPOSE: This collection of articles is intended for geocryologists and agriculturists.

COVERAGE: The collection was written by staff members of the Institut merzlotovedeniya, AN SSSR -- Institute of Permafrost Studies, AS USSR -- on the basis of their scientific research work conducted at the Laboratory of Physics and Mechanics of Frozen Ground. The articles in the first part

Card 1/4

of the collection deal with the physics of the cryogenic processes. Physical and chemical investigations in this field were based on the "theory of chemical potential" developed by I. A. Tyutyunov, Doctor of Geological and Mineralogical Sciences. The works in the second part of the collection are of considerable interest as they concern problems of mechanics of frozen ground and ice and include important results of investigations in Antarctica dealing with the processes of ice flow and deformation and the structural strength of frozen ground. A new method for calculating the plastic viscous flow of ice-sheets is proposed by S. S. Vyalov; his deductions are based on the data of field observations which he undertook during the second Soviet Antarctic Expedition (1956-1958). References follow each article.

TABLE OF CONTENTS:

Card 2/4

Investigations in Frozen-Ground Physics (Cont.) SOV/5834

Card 4/4

MM/rsm/mas
1-16-62

YEGOROV, K. Ye.

Deformations of foundations with finite thickness. Osn., fund. i mekh. grun. 3 no.1:4-6 '61. (MIRA 14:3)
(Foundations) (Strains and stresses)

YEGOROV, K. YE., DOC TECH SCI, "PROBLEMS OF THE THEORY AND PRACTICE OF ~~COMPUTING~~ calculating ~~THE~~ BASES OF ~~TERMINAL~~ finite THICKNESS." ~~A PA-~~ Re-PER COMPILED ON PUBLISHED WORKS IN COMPETITION FOR ~~A UNIVERSITY~~ academic DEGREE OF DOCTOR OF TECH SCIENCES. MOSCOW, 1961. (ACADEMY OF ~~BUILDING~~ Construction AND ARCHITECTURE USSR). (KL-DV, 11-61, 216).

YEGOROV, K.Ye.

Distribution of stresses and displacements in foundations of finite thickness. [Trudy] NIIOSP no.43:42-63 '61. (MIRA 14:8)
(Foundations)

YEGOROV, K.Ye.; SHILOVA, O.D.

Deformation of soil foundations of finite width under eccentric loading on a continuous footing. [Trudy] NII osn. no.49:5-16 '62. (MIRA 15:12)

(Foundations) (Soil mechanics)

YEGOROV, K.Ye.; SEREBRYANYY, R.V.

Determining stresses in a rigid circular foundation. [Trudy]NII osn. no. 53:4-11 '63. (MIRA 17:1)

YEGOROV, K.Ye.

Calculation of ring foundations on a compressible base. Sbor. trud. NIIosn. no.54:6-23 '64. (MIRA 17:10)

YEGOROV, L., kand. yuridich. nauk, starshiy nauchnyy sotrudnik

Legal significance of radar information from coastal radar stations. Mor. flot 25 no.10:21 O '65. (MIRA 18:11)

1. TSentral'nyy nauchno-issledovatel'skiy institut morskogo flota.

Yegorov L.

DUBOVYY, B., inzh.; ZAYDLER, M., inzh.; YEGOROV, L., inzh.

Cement silos made of large blocks. Gor. i sel'.stroi. no.5: 10-11 My '57. (MIRA 10:10)
(Concrete construction) (Cement)

YEGOROV, L., kand.yurid.nauk, starshiy nauchnyy sotrudnik

Marine arbitration in foreign countries. Mor. flot 23 no.5:36-37 '63. (MIRA 16:9)

1. TSentral'nyy nauchno-issledovatel'skiy institut morskogo flota.
(Arbitration and award)

CHUCHKALOV, A.; KOPOSOV, N.; PERFIL'YEV, N.; MAKAROV, V.; GUBANOV, A.; YEGOROV, L.; CHUZHMIR, A., aspirant

Creative initiative of the masses and the establishment of norms. Sots. trud 8 no.9:87-97 S '63. (MIRA 16:10)

1. Starshiy instruktor otdela proizvodstvennoy raboty i zarabotnoy platy Altayskogo promyshlennogo krayevogo soveta professional'nykh soyuzov (for Chuchkalov). 2. Nachal'nik byuro tekhnicheskoy informatsii Leningradskogo vagonostroitel'nogo zavoda im. I.Ye.Yegorova (for Koposov). 3. Zamestitel' nachal'nika otdela organizatsii truda Cherepovetskogo metallurgicheskogo zavoda (for Perfil'yev). 4. Nachal'nik otdela truda i zarabotnoy platy Lyublinskogo liteyno-mekhanicheskogo zavoda (for Makarov). 5. Starshiy inzh. Lyublinskogo liteyno-mekhanicheskogo zavoda (for Gubanov). 6. Starshiy inzh. otdela truda i zarabotnoy platy Ural'skogo turbomotornogo zavoda (for Yegorov). 7. Ural'skiy universitet (for Chuzhmir).

YEGOROV, L. A. and YEREMEYECHEV, A. V.

"The ZIS-155 Motor Bus," Avt. trakt. prom., No.3, 1952

YEGOROV, L. A.

Automobiles - Steering Gear

"Mechanisms of automobile steering." Reviewed by M. I. Lysov. Avt. trakt. prom. no. 4, April 1952

Monthly List of Russian Accessions, Library of Congress, August, 1952. UNCLASSIFIED

1. YEGOROV, L. A.

2. USSR - (600)

4. Automobiles - Springs

7. Hydraulic shock absorber of the telescope type with two-way action. Avt. trakt. prom. no. 10, 1952

9. Monthly List of Russian Accessions, Library of Congress, January 1953. Unclassified.

YEGOROV, L.A.

LYSOV, M.I.; KOROLEV, A.I.; YEGOROV, L.A., inzhener, retsenzent; DYBOR, O.V., kandidat tekhnicheskikh nauk, redaktor; MATVEYEVA, Ye.N., tekhnicheskiy redaktor; MODEL', B.I., tekhnicheskiy redaktor

[Methods of testing automobiles and their mechanisms] Metody ispytaniia avtomobilia i ego mekhanizmov. Moskva, Gos. nauchno-tekhn. izd-vo mashinostroit. lit-ry. No.4. [Stearing gear] Rulevye upravleniia avtomobilei. 1953. 81 p. [Microfilm] (MLRA 8:2)

1. Russia (1923- U.S.S.R.) Ministerstvo avtomobil'noy i traktornoy promyshlennosti.
(Automobiles—Testing) (Automobiles—Stearing gear)

YEGOROV, L.A.

USSR/Engineering - Magnesium alloys

Card 1/1 : Pub. 12 - 11/16

Authors : Egorov, L. A.; and Lutskiy, L. N.

Title : The application of magnesium alloys in automobile construction

Periodical : Avt. trakt. prom. 6, 28-30, June 1954

Abstract : An account is given of the application of magnesium alloys for construction of numerous automobile components together with methods for producing and working magnesium alloys, and an explanation of its use. Table; drawing; illustration.

Institution : .....

Submitted : .....

YEROROV, L. A.

YEROROV, L. A.- "Investigation of the Operating Conditions of an Automobile Piston Compressor." Min of Automobiles, Tractors, and Agricultural Machinebuilding USSR, State Union Order of Labor Red Banner Sci Res Automobile and Automobile Engine Inst (NAMI), Moscow, 1955 (Dissertations For Degree of Candidate of Technical Sciences)

SO: Knizhnaya Letopis' No. 26, June 1955, Moscow

YEGOROV, L.A.; IVANOV, Yu.B.; ROZANOV, V.G.; BUKHARIN, N.A., doktor tekhnicheskikh nauk, professor, retsenzent; SHUTYY, L.R., kandidat tekhnicheskikh nauk; SOKOLOVA, T.F., tekhnicheskiy redaktor.

[Methods of testing automobiles and their mechanisms] Metody ispytaniia avtomobilia i ego mekhanizmov. Moskva, Gos.nauchno-tekhn.izd-vo mashinostroitel'noi lit-ry no.6[Brakes] Tormoznye mekhanizmy. 1955. 165 p. (MLRA 8:11)

1. Russia (1923- U.S.S.R.)Ministerstvo avtomobil'nogo traktornogo i sel'skokhozyaystvennogo mashinostroyeniya.
(Brakes--Testing)

YEGOROV, L.A.; YERMOLAYEV, A.I.

Aluminum alloys in automobile construction. Avt. trakt. prom. no.7:25-27 Jl '55. (MIRA 8:9)
(Automobiles--Design and construction) (Aluminum alloys)

YEGOROV, L.A., kandidat tekhnicheskikh nauk; ROZANOV, V.G., kandidat tekhnicheskikh nauk.

Method for general testing of the pneumatic drive of automobile brakes. Avt.i trakt.prom.no.12:10-14 D '56. (MLRA 10:2)

1. Moskovskiy avtozavod imeni Likhacheva. 2. Nauchno-issledovatel'skiy avtomobil'nyy institut.
(Automobiles--Brakes)

YEGOROV, L.A., kandidat tekhnicheskikh nauk; YERMOLAYEV, A.I.

Testing and improving constant velocity universal joints for automobiles. Avt. i trakt. prom. no.2:17-23 F '57. (MLRA 10:3)

1. Moskovskiy avtozavod imeni Likhacheva.
(Automobiles--Transmission devices)

YEGOROV, L.A.

ROZANOV, V.G., kandidat tekhnicheskikh nauk; YEGOROV, L.A., kandidat tekhnicheskikh nauk.

Improving and standardizing air brakes. Avt.i trakt.prom. no.3:15-21 Mr '57. (MLRA 10:5)

1. Nauchno-issledovatel'skiy avtomotornyy institut i Moskovskiy avtozavod imeni Likhacheva.
(Automobiles--Brakes)

YEGOROV, L.; YERMOLAYEV, A.; MIKHAYLYUTA, D.

The ZIL-164 motortruck. Avt.transp. 35.no.3:26-29 Mr '57. (MIRA 10:5)

1.Moskovskiy avtomobil'nyy zavod im. I.A. Likhacheva.
(Motortrucks)

YEGOROV, Leonid Andrianovich, kand.tekhn.nauk; ROZANOV, Vladimir Grigor'yevich, kand.tekhn.nauk; VISHNYAKOV, N.N., kand.tekhn. nauk, retsenzent; LUBENETS, V.D., kand.tekhn.nauk, red.; LEZHNEVA, Ye.I., red.izd-va; EL'KIND, V.D., tekhn.red.

[Piston-type air compressors for motor vehicles; theory, design, construction, and testing] Avtomobil'nye porshnevye kompressory; teoriia, konstruktsiia, raschet i ispytaniia. Moskva, Gos. nauchno-tekhn.izd.mashinostroit.lit-ry, 1958. 235 p. (MIRA 12:2)
(Automobiles--Brakes) (Air compressors)

YEGOROV, L.A., kand. tekhn. nauk.

"Design of automobiles" by B.V. Gol'd. Reviewed by L.A. Egorov. (MIRA 11:2)
Avt. prom. no.1:44-47 Ja '58.

1. Moskovskiy avtozavod imeni Likhacheva.
(Automobiles--Design and construction)
(Gold, B.V.)

YEGOROV, L., inzh.

Operating pneumatic equipment of the ZIL-164 motortrucks.
Avt.transp. 37 no.11:16-20 N '59. (MIRA 13:2)
(Motortrucks--Pneumatic equipment)

MINKIN, Matvey Lazarevich, kand. tekhn. nauk; YEGOROV, L.A., kand. tekhn. nauk, retsenzent; DAVTYAN, R.I., inzh., red.; SMIRNOVA, G.V., tekhn. red.

[Starting devices for motor-vehicle engines] Puskovye ustroistva avtomobil'nykh dvigatelei. Moskva, Gos. nauchno-tekhn. izd-vo mashinostroit. lit-ry, 1961. 138 p. (MIRA 14:6)
(Motor vehicles—Ignition)

KUGEL', Rafail Viktorovich; LIPGART, A.A., doktor tekhn. nauk, prof.,red.; YEGOROV, L.A., kand. tekhn. nauk, retsenzent; YEGORKINA, L.I., inzh., red.; SOKOLOVA, T.F., tekhn. red.

[Life expectancy of motor vehicles] Dolgovechnost' avtomobilei. Pod red. A.A.Lipgarta. Moskva, Gos.nauchno-tekhn. izd-vo mashinostroit. lit-ry, 1961. 431 p. (MIRA 14:6)

(Motor vehicles)

GOL'D, B.V., doktor tekhn.nauk; OBOLENSKIY, Ye.P., kand.tekhn.nauk; YEGOROV, L.A., kand.tekhn.nauk

Strength of motor-vehicle shafts. Vest.mash. 41 no.1:22-27 Ja '61. (MIRA 14:3)

(Motor vehicles—Transmission devices)

YEGOROV, L.A.; FITTERMAN, B.M.

Foreign ground-effect machines. Avt.prom. 29 no.2:44-48 F '63. (MIRA 16:2)

(Ground-effect machines)

YEGOROV, L.A., kand. tekhn. nauk; KOZANOV, V.Ye., kand. tekhn. nauk

Analyzing technical characteristics of single-stage piston compressors for motor vehicles. Avt. prom. 30 no.3:34-40 Mr '64. (MIRA 17:6)

1. Gosudarstvennyy soyuznyy ordena Trudovogo Krasnogo Znameni nauchno-issledovatel'skiy avtomobil'nyy i avtomotornyy institut.

(A) L 8544-66 EWT(d)/EWP(c)/EWP(k)/T/ETC(m)/EWP(v)/EWP(1) WW

ACC NR: AP5023264 SOURCE CODE: UR/0113/64/000/006/0047/0048

AUTHOR: Yegorov, L. A. (Candidate of technical sciences)

ORG: NAMI

29
B

TITLE: Scientific-engineering conference on automobile reliability and life increase

SOURCE: Avtomobil'naya promyshlennost', no. 6, 1964, 47-48

TOPIC TAGS: automotive industry, mechanical engineering conference, motor vehicle

ABSTRACT: The conference was held at NAMI March 24 to 26, 1964, and was attended by more than 300 representatives from Gosplan, state committees, SSR and RSFSR ministries, scientific-research institutes, automobile factories, related industrial enterprises, and overhaul and repair organizations. More than thirty papers discussed among other topics, 1) the actual life of automobiles; 2) the scientific approach to the design and testing of reliable long-life parts and units; 3) constructive and technological measures for the increase in reliability and life of cars presently in production or being readied for production; 4) the quality and lifetime of automobile bearings and ways of increasing their lifespan; 5) the quality of metals used in automobile production and the requirements that should be imposed on the products of metallurgical enterprises used in car production, the quality of lubricants used for car maintenance; and 6) requirements imposed by foreign consumers with regard to the quality of

Card 1/2 UDC: 629.113:063

L 8544-66

ACC NR: AP5023264

automobiles intended for export. The work of the conference resulted in a series of resolutions concerning measures to be taken by appropriate institutes, factories, and administrative authorities. These measures are described extensively in this article which contains also the names of the authors of the various papers presented to the conference. Following the conference ten working groups were established for the planning of detailed programs.

SUB CODE: IE, GO / SUBM DATE: none

jw

Card 2/2

YEGOROV, L.A., kand. tekhn. nauk; FITTERMAN, B.M., kand. tekhn. nauk

Information. Avt. prom. 31 no.3:44-49 Mr '65. (MIRA 18:7)

L 34353-66 EWT(d)/EWT(1)/EWP(v)/T/EWP(t)/ETI/EWP(k)/EWP(h)/EWP(i) IJP(c)

ACC NR: AP5027474 (A) SOURCE CODE: UR/0032/65/031/011/1416/1417

JD/AT

AUTHOR: Yegorov, L. A.; Medvedeva, Z. S.

ORG: Institute of General and Inorganic Chemistry im. N. S. Kurnakov, A SSSR (Institut obshchey i neorganicheskoy khimii AN SSSR)

TITLE: Furnace for zone melting of semiconductor material

SOURCE: Zavodskaya laboratoriya, v. 31, no. 11, 1965, 1416-1417

TOPIC TAGS: melting furnace, ~~zone melting~~, metal zone melting, semiconducting material, METAL PURIFICATION, MELTING FURNACE

ABSTRACT: The efficiency of zone melting during purification of metals and semiconductors can be increased considerably by simultaneous use of several heaters. A 9-zone tubular furnace with nichrome wire as a heater was devised for zone melting at temperatures up to 1200C. An 0.8-mm nichrome wire 1 (see figure) was wound on an alundum tube 2, 500 mm long and 24 mm in diameter. Each heater, except the extreme 2, consisted of a spiral 7 mm wide and formed by 6 loops of wire at 5 mm distance between loops and 5 cm between the zones. The coils were covered from the top by a layer of refractory clay 1 cm thick. To decrease heat loss, the 2 wider spirals made up of 9 loops of nichrome wire were set at the

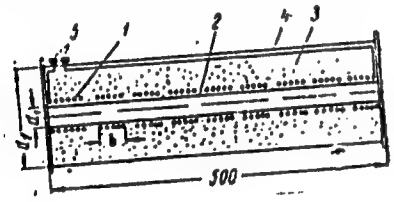

Card 1/2

L 34353-66

ACC NR: AP5027474

ends of the alundum tube and the entire furnace was insulated by asbestos 3. The heaters and the heat insulation were inclosed into a jacket 4, having an internal diameter of 200 mm. The stabilized voltage, delivered to 2 terminals 5 of each heater, was regulated by an autotransformer RNO 250-2, and the temperature was measured by a Pt-PtRh thermocouple, one end of which was set into the center of one of the zones. Orig. art. has: 1 fig.

SUB CODE: 13/ SUBM DATE: none

Card 2/2 ULR

L 42925-66 EWT(d)/EWP(h)/EWP(1)

ACC NR: AP6006517 (A) SOURCE CODE: UR/0113/65/000/011/0031/0035

AUTHOR: Shoykhet, B. M.; Yegorov, L. A. (Candidate of technical sciences); Fitterman, B. M. (Candidate of technical sciences)

ORG: NAMI

TITLE: Some data from research on a full-scale automobile model with partial air cushion wheel load relief

SOURCE: Avtomobil'naya promyshlennost', no. 11, 1965, 31-35

TOPIC TAGS: air cushion vehicle, light motor vehicle, vehicle engineering, performance test

ABSTRACT: The authors present the results of a study carried out at the Central "Order of the Red Banner of Labor" Scientific Research Institute of Automobiles and Automobile Engines on a full-scale experimental model to determine the effect of an air cushion on the characteristics of a wheeled motor vehicle. This model consists of an automobile with a 4×4 axle arrangement and a unit for relieving wheel load (see figure). The unit for relieving the wheel load is a simple chamber type air cushion consisting of the following parts: a chamber with a flexible curtain (1), two axial blowers (2) and the blower motor (3). The area covered by the air cushion is 7.37 m^2. The curtain can be lowered or raised by hand operated controls. Two intake lines (7)

Card 1/3 UDC: 629.113-9.001.57

L 42925-66

ACC NR: AP6006517

bring the air to the blowers which then force it into two angular air ducts (8). The entire model was built using existing parts used for the ZAZ-965 and MZMA-407 light automobiles. The model was tested on wet loam and sandy beaches. The tests were designed to determine the basic traction-power and delivery-expenditure characteristics of the model. The test program included determination of the initial parameters for estimating ground mobility, rolling resistance, contact forces between the wheel and the ground and resistance of various parts of the curtain to motion over waterlogged ground. In comparing ground mobility of the model, the air cushion was used at various pressure values. The first full-scale tests show that the control of the vertical load on the wheel by using the air cushion makes it possible to insure maximum traction on surfaces with low load

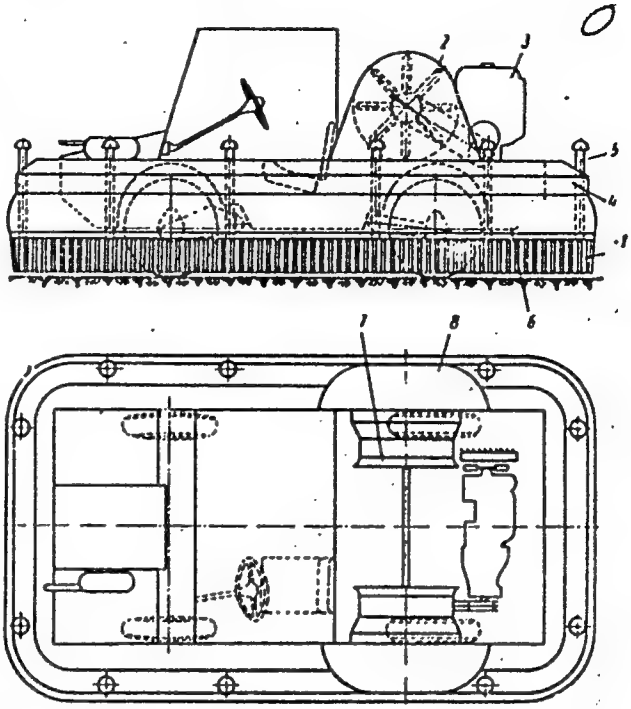

Card 2/3

L 42925-66

ACC NR: AP6006517

capacity. Certain disadvantages were encountered in the bulldozer effect of the curtain. This caused considerable resistance of the curtain to motion and the blowing out of its lower edge increasing air expenditure. A need for further study and development of flexible curtains is definitely shown by the results of this study. Future curtains should be able to hold in pressure from the chamber side but should also be able to encounter obstructions without setting up resistance, and a mechanism should be developed for adjusting the height of the lower edge of the curtain. Orig. art. has: 5 figures, 2 tables, 12 formulas.

SUB CODE: 13/ SUBM DATE: None/ ORIG REF: 008/ OTH REF: 001

Card 3/3

L 19014-65 EWA(h)/EWT(1)/EEC(t) AFWL/SSD/ASD(a)-5/RAEM(c)/ESD(c)/ESD(dp)/ESD(gs)

ACCESSION NR: AP4049046 S/0057/64/034/011/2038/2043

AUTHOR: Yegorov, L.A.; Lukashev, A.A.; Nitochkina, E.V.

TITLE: Investigation of the spectral sensitivity of semiconductor detectors to pulsed x-rays

SOURCE: Zhurnal tekhnicheskoy fiziki, v.34, no.11, 1964, 2038-2043

TOPIC TAGS: semiconductor device, radiation detector, pulsed radiation, x-ray detection

ABSTRACT: The authors have investigated the response of solid state radiation detectors to short x-ray pulses with intensities up to 10^9 erg/cm^2 sec. The x-ray equipment has been described elsewhere (A.A.Lukashev, ZhTF 31,1262,1961); it provided 10^{-7} sec pulses of 30 to 1100 keV x-rays with a mean pulse intensity of 3 x x 10^7 erg/cm^2 sec at 1 m from the anode. The intensity at the detector was varied by varying the tube-to-detector distance. Type p-n germanium and types p-n and p-i-n silicon radiation detectors were investigated. [Abstracter's note: The detectors are not further described nor identified.] The resistance in the detector circuit was approximately 100 ohm, and the output signal was observed with an oscilloscope.

1/3

L 19014-65

ACCESSION NR: AP4048046

The spectral sensitivities were determined by measuring the absorption curve of iron. The integral equation relating the measured absorption curve, the known spectral intensity distribution of the source, and the absorption coefficient of iron was solved by the method of L.Silberstein (Philos.Mag.15,375,1933). The response of the detectors was found to be proportional to the intensity up to the highest intensities employed (10^9 erg/cm^2 sec). Absolute sensitivities were determined by comparison with detectors of known sensitivity. The sensitivities to approximately 100 keV radiation were close to the values calculated by A.Shalpy*kov and Ye.M.Lobanov (Sb."Nekotory*ye voprosy* prikladnoy fiziki",p.36,Izd.AN UzSSR,Tashkent,1961), and for some silicon detectors they were as great as 10^{-16} A cm^2 sec/photon. The spectral sensitivity was found to be proportional to the product of the absorption coefficient of the detector material and the photon energy. The spectral sensitivity of the germanium detectors decreased rapidly with increasing photon energy in the region from 30 to 100 keV; that of the silicon detectors was nearly independent of photon energy (within 20%) over the whole range from 30 to 600 keV. Silicon detectors should, accordingly, be useful for a number of applications. Orig. art.has: 9 formulas and 3 figures.

L 19014-65

ACCESSION NR: AP4049046

ASSOCIATION: none

SUBMITTED: 21Feb64 ENCL: 00

SUB CODE: EC, OP NR REF SOV: 010 OTHER: 004

3/3

YEGOROV, L.A.; MEDVEDEVA, Z.S.

Furnace for zone reginement of semiconducting materials. Zav. lab. 31 no.11:1416-1417 '65. (MIRA 19:1)

1. Institut obshchey i neorganicheskoy khimii imeni Kurnakova AN SSSR.

L 4080-66 EWT(1)/EWT(m)/T/EWP(t)/EWP(b)/EWA(h)/EWA(c) IJP(c) JD/AT

ACC NR: AP5025804 SOURCE CODE: UR/0363/65/001/009/1620/1621

44,55 38 C

AUTHOR: Yegorov, L. A.; Medvedeva, Z. S. 44,55

ORG: Institute of General and Inorganic Chemistry im. N. S. Kurnakov, Academy of Sciences, SSSR (Institut obshchey i neorganicheskoy khimii Akademii nauk SSSR)

44,55

TITLE: Horizontal unit for growing single crystals of semiconducting materials by the Bridgman method 21,44,55

SOURCE: AN SSSR. Izvestiya. Neorganicheskiye materialy, v. 1, no. 9, 1965, 1620-1621

TOPIC TAGS: semiconductor, single crystal, single crystal growing

ABSTRACT: A simple horizontal Bridgman-type unit for growing structurally more perfect crystals of semiconducting materials melting below 1200C by oriented crystallization has been developed. The unit is diagramed and described in the source, and a description of the crystallization procedure is also given. The unit can be used for growing, from the liquid phase, both elemental and compound semiconductors such as InAs, InSe, or In_2Se_3 with given carrier concentration, provided that their vapor pressure at the mp is below 1 atm. Orig. art. has: 2 figures. [BO]

SUB CODE: SS SUBM DATE: 24Apr65/ ORIG REF: 000/ OTH REF: 000/ ATD PRESS: 4127

BVK

Card 1/1 UDC: 548.55

Yegorov L. B.

IGNATENKO, A. E., YEGOROV, L. B., KHALUPA, B. and CHULTEM, D.

"Investigation Depolarization of Negative π Mesons in Liquid Hydrogen,m"

paper presented at Annual International Conference on High Energy Phsysics, CERN, Geneva, 30 Jun - 5 Jul 58.

Yegorov L. B.

IGNATENKO, A. E., YEGOROV, L. B., KHALUPA, B. and CHULTEM, D.

"Measurement of Negative π Mesons Depolarization in Mesic Atoms of Carbon, Oxygen, Magnesium, Sulfur, zinc, Cadmium and Lead."

paper presented at Annulal International Conference on High Energy Physics, CERN, Geneva, 30 Jun - 5 Jul 58.

Laboratory of Nuclear Probelems, Joint Institute for Nuclear Research, Dubna, USSR

24(5) SOV/56-35-4-9/52

AUTHORS: Ignatenko, A. Ye., Yagorov, L. B., Khalupa, B., Chultem, D.

TITLE: Investigation of the Depolarization of Negative μ-Mesons in Liquid Hydrogen (Issledovaniye depolyarizatsii otritsatel'nykh μ-mezonov v zhidkom vodorode)

PERIODICAL: Zhurnal eksperimental'noy i teoreticheskoy fiziki, 1958, Vol 35, Nr 4, pp 894-898 (USSR)

ABSTRACT: The investigation of the capture of polarized negative myons in hydrogen furnishes data concerning the form of weak myon-nucleon interaction (Refs 1-3). The myon absorption process on protons develops according to $\mu^- + p \rightarrow n + \gamma$. Thus, investigation of the angular neutron distribution of this reaction according to the formula $\omega(\theta) = 1 + a\beta \cos\theta$ (β-asymmetry coefficient of neutron angular distribution, θ-angle between the direction of neutron emission and myon spin, a - the degree of polarization of myons in mesic hydrogen) should supply information concerning the form of interaction. The present paper, which deals with the experimental investigation of myon polarization in liquid hydrogen, was carried out on the synchrocyclotron Ob"yedinennyy

Card 1/3

Investigation of the Depolarization of Negative μ-Mesons in Liquid Hydrogen SOV/56-35-4-9/52

institut yadernykh issledovaniy (United Institute for Nuclear Research). After a short theoretical explanation of possible (μ^-H)-processes, the experimental arrangement is described and results are discussed. The angular distribution of the electrons (μ - e -decay) was measured by means of scintillation counters; within the error limits isotropy was determined. The degree of polarization of myons in mesic hydrogen, which was calculated according to the results obtained by measurements of angular distribution, is less than 2.5%. The complete μ^--meson depolarization is explained according to Ya. B. Zel'dovich and S. S. Gershteyn (Refs 7-9) by the fact that the myon should jump from one proton to another, simultaneously with transition to the hyperfine structure ground state. According to this mechanism also the mutual transformation of ortho- and para-hydrogen is possible. As, however, the μ^--mesons are subjected to total depolarization, it is impossible to draw conclusions on the basis of measurement of neutron angular distribution of the process $\mu^- + p \rightarrow n + \nu$, as to the form of interaction between a negative myon and nucleon. In conclusion the authors

Card 2/3

Investigation of the Depolarization of Negative μ-Mesons in Liquid Hydrogen SOV/56-35-4-9/52

thank Ya. B. Zel'dovich, Academician, and S. S. Gershteyn for their help and discussions, and they expressed their gratitude to V. B. Belyayev and B. N. Zakhar'yev for their discussions and their constant interest in this work.
There are 1 figure and 15 references, 7 of which are Soviet.

ASSOCIATION: Ob"yedinennyy institut yadernykh issledovaniy (United Institute for Nuclear Research)

SUBMITTED: May 5, 1958 (initially) and July 14, 1958 (after revision)

Card 3/3

24(5) SOV/56-35-5-10/56

AUTHORS: Ignatenko, A. Ye., Yegorov, L. B., Khalupa, B., Chultem, D.

TITLE: The Measurement of the Polarization of Negative μ-Mesons in Mesic Atoms of Carbon, Oxygen, Magnesium, Sulfur, Zinc, Cadmium, and Lead (Izmereniye polyarizatsii otritsatel'nykh μ-mezonov v mezoatomakh ugleroda, kisloroda, magniya, sery, tsinka, kadmiya i svintsa)

PERIODICAL: Zhurnal eksperimental'noy i teoreticheskoy fiziki, 1958, Vol 35, Nr 5, pp 1131-1134 (USSR)

ABSTRACT: An investigation of the angular distributions of neutrons originating from the process $\mu^- + p \rightarrow n + \nu$ (capture of polarized muons in liquid hydrogen) would offer a possibility of obtaining information concerning the form of weak muon-nucleon interaction (Refs 1, 2). As was, however, shown by experiments (Ref 3), this is not possible because of the total depolarization of muons. A theoretical investigation (Ref 2) of the capture of polarized muons by light nuclei shows, however, that by measuring the angular distribution of neutrons with energies in the upper part of the spectrum it is possible to determine the nature of interaction. The formula for angular distribution is $W(\Theta) = 1 + a\beta\gamma \cos \Theta$. Herefrom it follows that

Card 1/4

SOV/56-35-5-10/56

The Measurement of the Polarization of Negative μ-Mesons in Mesic Atoms of Carbon, Oxygen, Magnesium, Sulfur, Zinc, Cadmium, and Lead

investigation of neutron angular distribution should be preceded by measurement of muon polarization in the mesic atoms as well as by an investigation of neutron depolarization in nuclear matter (in the formula β denotes the asymmetry coefficient of angular distribution, the amount and sign of which depends on the form of interaction, θ - the angle between the direction of neutron emission and the spin of the muon, a and γ - coefficients connected with polarization and depolarization respectively). Within the framework of this investigation program, the present paper describes muon polarization measurements carried out in various substances. Determination of polarization was carried out by measuring the anisotropy of the angular distribution of decay electrons by using the apparatus described by reference 3. Aluminum filters were used for the purpose of slowing-down pions and muons. The target had a size of 15.15 cm^2 and its thickness corresponded to 2-6 g/cm^2; the target was inclined towards the axis of the meson beam at an angle of 45°. The polyethylene filter between the counters corresponded to 4-8 g/cm^2. For C, O, Mg,

Card 2/4

SOV/56-35-5-10/56

The Measurement of the Polarization of Negative μ-Mesons in Mesic Atoms of Carbon, Oxygen, Magnesium, Sulfur, Zinc, Cadmium, and Lead

and S the asymmetry coefficient a was determined in the electron angular distribution $I(\theta) = 1 + a \cos \theta$ by investigating the dependence of the number of electrons on the voltage of the H-field in which the target was located. For Zn, Cd and Pb a was determined by determining the number of electrons at H_{max} and H_{min}, corresponding to the maximum and minimum of electron intensity on the precision curve

$$I(H) = \int_{t_1}^{t_2} e^{-t/\tau_0} \left[1 + a \cos(2\pi f t) + \theta_0)\right] dt.$$ Results of polarization determination:

C: 14 ± 4
O: 15 ± 4
Mg: 20 ± 5
S: 15 ± 4
Zn, Cd, Pb: 19 ± 7

Card 3/4

SOV/56-35-5-10/56

The Measurement of the Polarization of Negative μ-Mesons in Mesic Atoms of Carbon, Oxygen, Magnesium, Sulfur, Zinc, Cadmium, and Lead

These values give muon polarization in %. In substances in which nuclear spin is equal to zero, muon depolarization can be explained mainly by spin-orbit interaction during the formation of mesic atoms; partly it may also be explained by the effect produced by the magnetic field of the electron shell of the atom on the muon during its life on the K-orbit. There are 1 figure, 1 table, and 11 references, 4 of which are Soviet.

ASSOCIATION: Ob"yedinennyy institut yadernykh issledovaniy (Joint Institute of Nuclear Research)

SUBMITTED: May 31, 1958

Card 4/4

16.8100,16.8300,24.6100,
24.6200,24.2100

76963
SOV/56-37-6-3/55

AUTHORS: Egorov, L. B., Ignatenko, A. E., Chultem, D.

TITLE: Effect of the Hyperfine Structure on the Polarization of μ^--Mesons in Mesic Atoms

PERIODICAL: Zhurnal eksperimental'noy i teoreticheskoy fiziki, 1959, Vol 37, Nr 6, pp 1517-1523 (USSR)

ABSTRACT: A study was made with the aid of scintillation counters of the angular distributions of the μ^--meson decay electrons from aluminum, phosphorus, and carbon mesic atoms. It was shown that because of the interaction of the hyperfine structure there was a decrease of the μ^--meson polarization. These results accord with the theoretical calculations provided that the depolarization exclusively on the K orbit of the mesic atom is taken into account. A comparison of the results of the measurements for phosphorus with the results previously obtained for liquid hydrogen (cf. A. E. Ignatenko, L. B. Egorov, B. Khalupa, D. Chultem, Zhur. eksp. i teoret.

Card 1/3

Effect of the Hyperfine Structure on the Polarization of μ^--Mesons in Mesic Atoms

76963
SOV/56-37-6-3/55

fiz., 35, 894, 1958) showed that the complete depolarization of μ^--mesons observed in hydrogen cannot be explained only by the interaction between the fine and hyperfine structures. The explanation would require the assumption of an additional mechanism (such as the "jumping" of a μ^--meson from one proton to another with concurrent transition of the hyperfine structure to the ground state). All experimental data on the depolarization of μ^--mesons in various substances can be explained theoretically, if it is assumed that in the mesic atoms of metals the electron shell does not affect the depolarization of μ^--mesons. The presence of a fine and hyperfine structure in mesic atoms was confirmed and this again indicated that the electromagnetic properties of mesons and electrons are similar. In experiments with phosphorus the observed reduction of precision frequency in the mesic nucleus spin by a factor of 2 as compared with the precision frequency of the free μ-meson spin indicates directly that the spin

Card 2/3

Effect of the Hyperfine Structure on the Polarization of μ^--Mesons in Mesic Atoms

76963
SOV/56-37-6-3/55

of a negative μ-meson is equal to 1/2. There is 1 graph; 1 table; and 11 references: 6 Soviet, 5 U.S. The 5 most recent U.S. references are: M. E. Rose, Depolarization precesses for negative mu-mesons, preprint Oak Ridge Nat. Lab., 1958; H. Uberall. Hyperfine splitting effects in the capture of polarized μ^--mesons, preprint Carnegie Inst. of Technol., 1959; J. Bernstein, T. D. Lee, C. N. Yang, H. Primakoff. Phys. Rev., 111, 313, 1958; R. Garwin, L. Lederman, M. Weinrich. Phys. Rev., 105, 1415, 1957; V. Telegdi. Proc. of 1958 Ann. Intern. conf. on high energy physics at CERN, p. 250.

ASSOCIATION: Joint Inst. Nuclear Research, USSR (Ob'edinenyy institut yadernykh issledovaniy, SSSR)

SUBMITTTED: June 7, 1959

Card 3/3

IGNATENKO, A.Ye.; KUPTSOV, A.B.; LI SUANG-MING; PETRASKU, M.G.; YEGOROV, L.B.; ZHURAVLEV, G.V.

Spin dependence of weak interaction in the process $\mu^- + p \to n + \nu$ Dubna, Izdatel'skii otdel Ob"edinennogo in-ta iadernykh issledovanii, 1961. 13 p. (MIRA 14:10)

(No subject heading)